Saturation Detection for Advanced Urban Traffic Control No Longer a Necessity

Joseph Perrin, Jr.
UTAH TRAFFIC LABORATORY - UNIVERSITY OF UTAH

Peter T. Martin
UTAH TRAFFIC LABORATORY - UNIVERSITY OF UTAH

Real-time adaptive traffic signal control systems require costly detector information. If limited traffic detectors could be used more efficiently, then implementation of adaptive signal control system would be cheaper. We can now access real time traffic flow data remotely. Sparse detector data can be manipulated to provide comprehensive real-time information. This research demonstrates how a new model, Turning Movement Estimation in Real Time (TMERT) infers unknown flows from those detected. The evaluation of the effectiveness of the quality of the estimates is comprehensive: 7,000 simulations and real-world network flow information on four separate networks with over 150 hours of traffic flow information. The paper details the relationship between actual detector data and the quality of the estimates. A location-allocation algorithm allows each link in a network to be ranked for prioritizing the detection locations. The multi-variant exponential relationship combines link flow and relative location within the network. This Utility Function's purpose, therefore, is to enable the user to identify where to locate new permanent detectors to maximize model effectiveness. The findings identify that the TMERT model must operate with at least 30% coverage to provide reliable estimates and that it operates more efficiently at higher congestion states.

Introduction

Timely traffic flow information is critical for optimizing a signalized urban network. If the traffic flows on each link of a network are known, then timing plans can be implemented to optimize coordination and effectively reduce delay to vehicles. If turning movements at each intersection are known or accurately estimated on-line, then further optimization can occur through adaptive signal control systems. Adaptive control systems that optimize signal timings in real-time currently rely on saturation detection of a network. This makes these advanced systems prohibitively expensive. There are only a handful of US cities operating true adaptive traffic signal control systems (Oxnard, Anaheim, San Diego CA, Troy MI, Arlington VA and Minneapolis MN). If costs for these adaptive systems were reduced through reducing the intensity of detection, then the systems would become more attractive. The Turning Movement Estimation in Real Time (TMERT pronounced T-MERT) model provides a mechanism for estimating flows, both unknown link and intersection turning movements, and allows complete flow information to be inferred without the need for saturation coverage. While automatic vehicle detectors provide link flow measures, costly detection systems are needed to detect turning movement flows. The TMERT model applies State Estimation Theory to network traffic. Linear programming provides the mathematical basis to solving a network optimization problem. By detecting a sample of network link flows in real-time, cordon flows and network geometry, unknown link and turning movement flows can be estimated.

The premise is that the TMERT model can infer traffic flow information sufficiently for use with an adaptive control signal system using less than saturation detection. The optimal layout of detection devices is a function of the number of detectors and the relative location to other detectors with influences due to link flow. There is an optimal condition whereby increasing the number of detectors provides marginal improvement on modeling quality. This analysis evaluates the TMERT flow estimation model with regards to the sensitivity of detector coverage, detector location and network flow condition measured as level of congestion (network volume to capacity, V/C).

Local, state and federal transportation representatives have identified the TMERT application as having a wide range of application. Their perspective does not focus on adaptive signal control. Rather, they identify the immediate model application as a real-time flow estimation tool for planning and incident rerouting control. The more general application is bridging the gap between state-of-the-art and state-of-the-practice in flow estimation by showing that saturation detection is not necessary. Advanced modeling by practitioners is available as never before due to realistic input requirements being realized.

The research tests the location and allocation of detection devices utilizing a 20-intersection network in downtown Salt Lake City, Utah. Simulated data is developed to minimize the effects of network noise and other traffic discrepancies. This simulated data is derived from comprehensive surveys that are manipulated to provide a wide range of flow conditions. The Monte Carlo model introduces random disturbances to provide sets of "known flows" over a range of network congestion levels. A network V/C ratio of 0.5 to 1.1 in 0.1 intervals pro-

vides 7 flow profiles analyzed. Each flow profile is defined by 10 independently defined flow profile for a total 70 known flow profiles. In this way, actual traffic patterns serve as the seed to a vast array of flow scenarios that are "clean". This means that all external effects are isolated, and the model tests represent a controlled set of experiments. The range of network flow levels is so varied that it provides a complete evaluation of traffic congestion effects on the model.

The Monte Carlo generated flow simulations are based on field observations allowing the random simulation to be bound by actual observed flows. A week of observed cordon and internal link flows collected in 15-minute intervals provides the basis for determining the relationship between link and relative flows in developing the simulated data. Turning movement variation is investigated for four of the network intersections to provide more thorough insight into the turning movement variability issues. These same four intersections are observed for three different PM peak periods on consecutive weeks. Finally, each intersection of the 20-intersection network is observed for a sample 20-cycles to evaluate turning movement flows and proportions of each approach during the peak PM period. This information is applied to the Monte Carlo modeling to determine realistic volumes. The collected link and cordon flows are used to validate that the Monte Carlo model provides realistic traffic flows for the various levels of congestion developed.

Once the simulated flows are completed, sets of "known" flows are available for comparison with the modeled turning movements. The testing of the TMERT model's performance is assessed through the correlation measure of coefficient of determination, R2, comparing the "known" and TMERT modeled turning movement and link flows. Traffic flow levels, detector coverage, and detector layout pattern all influence the quality of TMERT's estimates.

The results have advanced the TMERT model by providing the most comprehensive testing of the model to date through evaluating the model effectiveness at under-capacity, near capacity, at capacity and over-saturated congestion states as defined by the 1998 Highway Capacity Manual (HCM, 1998). Over 7,000 TMERT modeling runs support this analysis and the resulting conclusions. A method for determining the required number of detectors for a given model performance is described along with a second method for locating where the detectors should be located within the network. A more comprehensive account of the analysis process is provided in University of Utah Project Report (UTL, 1998).

Estimating Turning Movements

Maximizing the capacity of a signalized intersection requires knowing the turning proportions and volumes in order to optimize the phasing and cycle length. While actuated detection allows a signal to respond to traffic demand, actuation is not conducive to coordination. Fixed time plan coordination is currently the most common method implemented in the US to increase efficient use of corridor capacity. There are several software packages that determine fixed time plans. TRANSYT (Robertson, 1969) enjoys widespread application. Fixed time plan development requires sample turning proportion and flow data. Plans, therefore, are based on average flow conditions. Current practice assumes that a one-time traffic survey is representative of the traffic flow for the entire period and that the average traffic condition provides sufficient accuracy to develop a timing plan that optimizes signal settings. With changes in traffic patterns, the fixed time plans have been shown to age with a minimum 3% annual deterioration in efficiency (Bell and Bretherton, 1986). Network wide modifications to these fixed-time systems are rare because sampled surveys are so labor intensive. This limitation has been recognized since the 1960's and continues to prompt development of advanced demand responsive traffic control systems.

Many different adaptive traffic control systems (ATC) have been installed worldwide most specifically designed for a particular location. Only two systems have been installed extensively worldwide, SCOOT and SCATS. Houndsell and McDonald, 1991 and Wolshon and Taylor, 1998 have shown that SCOOT and SCATS reduce vehicle delay by an average 20% over updated fixed time systems. Unfortunately, ATC's need vast quantities of real-time data from many link detectors. The capital and maintenance costs of detectors are a primary deterrent to those contemplating implementing ATC. TMERT makes better use of existing detectors data and obviates the need for more.

Flow estimation methods are characterized as O-D matrix based, rhythmic and predictive. An O-D matrix is a tabular representation of a set of trips from a set of origins to a set of destinations. An O-D matrix estimating model can supply turning movement flows in real time, providing it is quick enough to generate the O-D matrices with time left to assign trips to provide turning movement flows. These techniques have their deficiencies. They cannot provide enough accuracy to control traffic in real-time. Rarely do absolute flows from assignment agree with those measured on the street and they demand considerable computational effort. These models typically require a prior or seed O-D matrix. Even with such a start, the solutions give approximations to real values of turning proportions through inferred O-D matrices. Not enough research results have been released to provide reliable statements about the quality of estimates, however, work continues with efforts to overcome these deficiencies through dynamic traffic assignment techniques (Gartner et al, 1997); (Peeta and Mahmassani, 1995). These models under development are not yet in practical circulation. Further, these methods rely on some notion of behavior that captures an aspect of driver response in assigning network trips: Alder et al. (1992), Koutsopoulous et al. (1993), Yang et al. (1993), Chen and Mahmassani (1993), Polydoropoulou et al. (1994), Ben-Akiva et al. (1996).

The rhythmic family of models relies on the relationship between entry and exit flow patterns for isolated intersections or small clusters of intersections. Turning estimates and entry flows model exit flows which are then compared to detected exit flows. The turning estimates selected are those providing

the best fit between exit flows modeled and estimated. Ploss and Keller (1986) present a dynamic algorithm that links the causal dependencies of the volume profiles with entropy maximization distribution models. By introducing travel times between the counting sites, the time of progression of the traffic through a route assists in supplying turn estimates. Cremer and Keller (1987) show that short period exit flows depend by causal relationships, upon the time variable sequences of entrance flow volumes. Unique bias free estimates were derived without a priori information using four methods: Least Square using cross correlation matrices after Cremer and Keller (1981), Constrained Optimization, Recursive Estimation, and Kalman Filtering. Bell et al. (1991) show how these dynamic methods could be extended from complex intersections to limited freeway networks.

Predictive models, like rhythmic models, are intersection oriented rather than network based. Although they can operate over short intervals, they predict future traffic activity, rather than infer existing. Head (1995) presents a predictive model that relies on actual detected flow and signal setting information, it predicts future trips in a dis-aggregate way. Drawing on classical speed flow theory, it takes detected flow and signal settings to estimate trips with the help of a simple queue estimation algorithm and a stochastic turning movement component. Davis and Lan (1995) further these methods through a means of estimating turning counts from incomplete detector data. They show how intersection turning movements can be estimated in real-time, even if some of the approaches lack detectors.

The TMERT model is both quick and network oriented. It estimates turning proportions in real-time and does not rely on extensive information such as Origin-destination matrices, detection of every intersection approach and departure volumes, prior turning movement seed matrices or driver behavioral elements.

TMERT Model Concept

The continuity of flow at each intersection is modeled as a series of linear equations. The method was originally developed to optimize the costs of distributing water and electricity and comes from the field of Operational Research. High-speed network flow algorithms estimate the "State" of a system, in real time. A comprehensive bibliography, spanning 1968 to 1989, on the application of *State Estimation Theory* to electrical power systems has been prepared by Filho et al (1990).

A weight function is introduced which serves as a model controlling mechanism rather than a cost function. Encouragement or deterrence of paths or movements is influenced by the weights, yet there is no attempt to imitate drivers route choice. The weights represent network calibration factors. They serve to estimate the state of the traffic system (i.e. derive turning movement and link flows) from geometric and any detected real-time traffic data.

The objective function is a mechanism for identifying the one solution from the many possible solutions. Mathematically, its value represents the degree of constraint imposed, thereby reflecting the noise level inherent in the detector data. Since each flow prediction is associated with a set of constraints, the goal is to establish a constraint regime so that the minimized objective function is associated with a particular solution, whereby unknown flows are reliably inferred. The model can be described as a traffic flow curve-fitting device. It stands apart from all other models in two ways. First, its route logic is node oriented. It moves through the network node by node, satisfying continuity by balancing in-flows with out-flows. The flow on consecutive links is effectively defined independently. Second, it has been structured to draw on real-time, on-line detector data.

Supply and demand nodes apply the traffic loads on the network. They are served by cordon nodes or network internal attraction/generation locations and represent network vehicle entrance or exit locations. A heuristic procedure obtains the initial basic feasible solution by quickly finding low-cost paths through the network that transport large portions of the flow to the demand nodes. Artificial error arcs are incorporated into the spanning tree process to allow initial model feasibility by quickly assigning high flow routes. The allowable flow for each of these error arcs is decreased as a set of arcs are found to accommodate the demand nodes flow for a smaller network cost. Heavy weights are assigned to the error arcs to discourage their use. Initially, a wide flow range is permitted along error arcs through large upper bounds. With each successive optimization run, the range of permitted error arc flows is further constrained until no feasible solution exists. At this point, the last successful solution is taken as the flow estimate. Figure 1 shows the modeling structure. Explanation of mathematical derivation, model development and coding properties are described in Perrin (1995), Martin (1992), and Martin (1995).

This modeling approach does not attempt to simulate complex traffic characteristics. Rather, it seeks to derive the comprehensive set of link and turning movement flows that are consistent with the signal control regime and flows detected in real-time. The algorithm is so quick that many runs per second enable the model to increase the degree of constraint incrementally to arrive at the optimum solution quickly. Its computational speed provides its real-time capability. Its early development was on an "80386" chip that provided instantaneous estimates. Today's, processors are much quicker enabling TMERT to model vast complex urban traffic networks

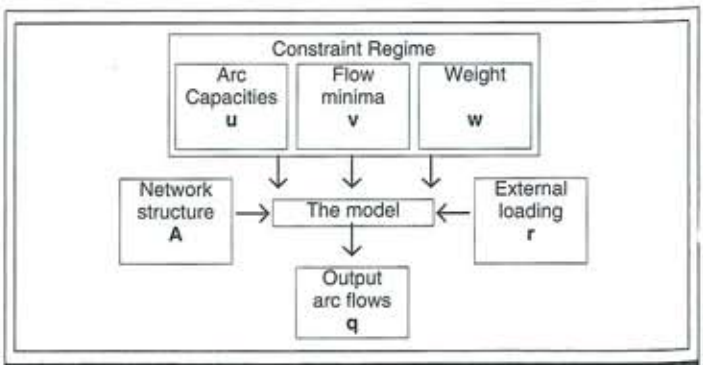

Figure 1. Model Input and Output

Supporting Data

This work tests the location and allocation of detection devices utilizing a 20-intersection network in downtown Salt Lake City, Utah. In order to minimize the effects of network noise and other traffic discrepancies, simulated data is developed and applied in the testing. This simulated data is from a Monte Carlo model developed specifically to provide sets of "known flows" to test the TMERT model runs. In this way, traffic noise is controlled, and the network is balanced. Further, the range of network flow levels can be varied to provide a complete evaluation of traffic congestion effects.

The Monte Carlo model provides randomized traffic flow patterns that are based on field observations. A uniform distribution is applied to the modeling to allow any flow profile within the maximum and minimum range to have the same probability of occurring. This provides a more rigorous test of the TMERT capabilities over the traditional use of the normal distribution, which relies much more heavily on the average flow profile. - A week of observed cordon and internal link flows collected in 15-minute intervals provides the basis for determining the relationship between link and relative flows in developing the simulated data. Turning movement variation is investigated for four of the network intersections to provide more thorough insight into the turning movement variability issues. These same four intersections are observed for three different PM peak periods on consecutive weeks. Finally, each intersection of the 20-intersection network is observed for approximately 20 cycles to evaluate turning movement flows and proportions of each approach during the peak PM period. This information is applied to the Monte Carlo modeling to determine realistic volumes and provide the maximum and minimum turning proportions by approach.

Once the simulated flows are completed, sets of "known" flows are available for comparison with the modeled turning movements. The 70 sets of known flows are 7 V/C network flow conditions from 0.5 to 1.1 with 10 independent simulation for each flow condition. The testing of the TMERT model's performance is assessed through a correlation measure, R2 that compares the "known" and modeled turning movements and link flows. A regression line ANOVAR process, f-statistic test, and confidence intervals were all part of the analysis to ensure a comprehensive statistical review. There is no significant difference between the model estimates and actual simulated flows at a 95 percent confidence limit whereby TMERT functions to within an allowable error of 8%.

TMERT Modeling

The research goals focus on evaluating the TMERT model's performance with respect to:

- intensity of detector coverage sensitivity
- detector location sensitivity
- consistency for various network flow conditions: under-, near-, and -over-saturated conditions

Individual link analysis isolates each network link and allows flow and location factors to be evaluated independently. The incremental increase in detection level then identifies the TMERT model's performance as a function of detection coverage. Location sensitivity is tested through comparison modeling of distributed versus localized detector patterns. All analyses are mutually and embrace testing with flow conditions from under-saturation to saturated conditions. The resulting empirical relationships provide: a method for identifying the importance ranking of each possible detector location in the network, model performance as a function of detector coverage and model performance with respect to flow and network flow condition.

Individual Link Analysis

The systematic method of detecting each individual link is a base line approach in which the general relationship of each link can be related to the overall performance of the model. With only a single detector input, the model output in terms of performance is poor; however, trends identify how location and flow level affect the model. So, the two factors of flow level and location are evaluated exclusively.

Using the 70 known flow sets, TMERT modeling runs for each V/C range provide a measure of the single detectors location on the model's ability to estimate flows. The same 70 known set allows each detector location to be compared for its impact on the modeling performance. While there are 56 links on the SLC network, only 31 sets of detector patterns are evaluated due to the characteristics of the network. The 56 links are modeled as directional components, however, when a detector is installed, the need for communication and power allows both directions to be detected. In practice, it is unlikely that only one direction of travel would be detected if the trouble has been taken to provide power and communication to a location. Therefore, detectors are assumed to be paired, providing information on both directions of link travel.

As the network congestion (measured as network V/C) increases, the model performance increases. This supports a V/C influence on the TMERT model results. As the congestion of the network increases, the model performance for a given flow increases. It was identified that another factor other than flow impacts the TMERT model performance. A detector's location within the network impacted model outcome and therefore was investigated as a secondary factor to traffic volume.

Isolating Location Effects

Each link is located within the network by relating its position from the cordon. Distance from the top, bottom and sides form a rating. For the SLC network, a rating of 1 to 4 is applied. This rating is a combination between the link's distance from the nearest adjacent cordon edges, measured as the number of intersections between the link and the closest adjacent cordon lines. Figure 2 identifies the rating for each link in the SLC network.

The location rating identifies the distance in terms of nodes (intersections) from the outside known cordon flows to the

location link. As the location of the detected link moves further into the network and away from the cordon, less information is known about the immediately surrounding flows. Mathematically, the numbers of possible flow estimate combination increases at each intersection where turning movements are possible. The location rating is simply an ordinal method for identifying the number of transition points between the cordon and the link location and does imply a multiplying factor or weighting measure but simply a measure of distance from the network cordon.

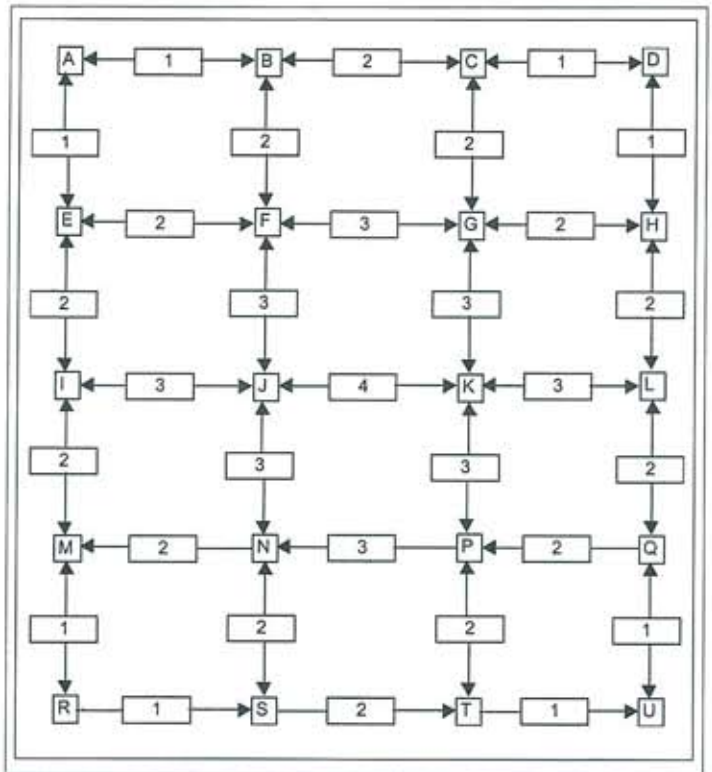

Figure 2. Link Location Rating

When the model performance is averaged for the individually detected links by location ratings, the results indicate that as the location of detection progresses further from the cordon lines, the model performance improves.

Increasing Network Detection by Volume

Once the preliminary relationships are developed between location and flows for individual link detection, consideration is given to multiple detector coverage sites. The addition of detectors can be based on flow or some logic influenced by location. When based on flow, the highest flow link is selected for the initial detector location. The subsequent detectors are added in a descending order from highest flows to lowest flows. This is referred to as High-to-Low detection. Building from 1 to 31 detected links and for the 10 independent simulation runs provides 310 TMERT modeling runs for each V/C ratio. Figure 3 shows the plot of model performance as a function of detection coverage for the 7 V/C ranges. The opposite method of detecting from Low-to-High flow level was also investigated showing a linear relationship but not producing the same results level as the High-to-Low method. The results indicate that the congested state of the network impacts the results of the estimate for lower detection levels. As the detector coverage of links on a network increases, the variability between the under-capacity and over-saturated conditions converge. The findings include a relationship between detector coverage and estimated model performance. The 30% detector coverage appears as an aspect change in the relationship between coverage and model performance. As detector coverage increases from 5 to 30%, the quality of the mean model estimate correlation improves from 30% to 65%. At the 30% detection, the slope of the relationship reduces and the increase in model performance as a function of detector coverage reduces from 15% to 2% per 10% increase in detection. In addition, the model performance spread as a function of congestion levels reduces as the detection increases. At the 10% detection level, spread is 40% over the congestion ranges. This reduces to 30% at the 28% detection and to 20% spread at the 30% detection value. By 80% the spread is down to 6% and 3% at 92% detection. These results are illustrated in the Figure 3.

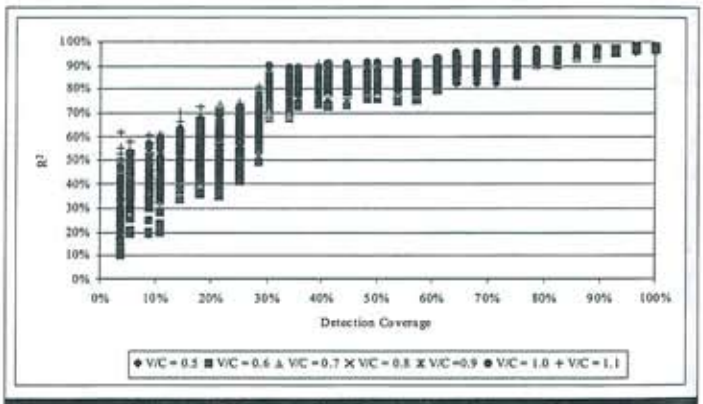

Figure 3. Increasing Detector Coverage from High-to-Low for all V/C

To summarize, therefore, it is clear that the quality of the TMERT's estimates improve linearly with increasing detector coverage of 0 to 30% and that beyond 30%, the quality of the estimates improves marginally. Equations for the regression curves based on V/C and associated R2 are shown in Table 1.

V/C	Regression Equation	R^2
0.5	$R^2_{est} = 0.2299Ln(D_{\%}) + 0.984$	94%
0.6	$R^2_{est} = 0.2583Ln(D_{\%}) + 0.994$	89%
0.7	$R^2_{est} = 0.211Ln(D_{\%}) + 0.9883$	90%
0.8	$R^2_{est} = 0.2319Ln(D_{\%}) + 0.9844$	91%
0.9	$R^2_{est} = 0.2195Ln(D_{\%}) + 0.9875$	91%
1.0	$R^2_{est} = 0.2096Ln(D_{\%}) + 0.9896$	90%
1.1	$R^2_{est} = 0.1671Ln(D_{\%}) + 0.9851$	92%

$D_{\%}$ is the percentage links on the network with traffic detector measured in decimal

R^2_{est} is the estimated R^2 model performance value for all undetected turning movement and link flows

Table 1. High-to-Low Regression Equations by V/C

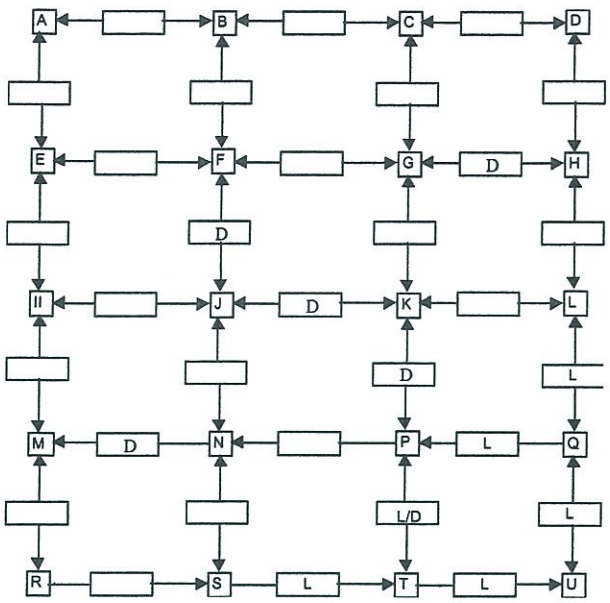

Figure 4. Detector Pattern for Localized and Distributed Pattern

Comparing Distributed Network Detection with Localized Detection

The results of the individual link enumeration indicate that location has an impact on model performance. To test this, the network is assigned 6 detectors under two location patterns. The first pattern bases the detection on an evenly spaced logic. The second pattern utilizes highly concentrated detection in one section of the network. Figure 4 shows the links detected for the Localized and Distributed detector patterns. To minimize the link flow impacts, the net sum of each detection pattern is based on similar flow level. This implies that all links detected sum to a similar total detected flow level within 5% for both location patterns. The results indicate that the distributed pattern provides an average 17% better overall model performance than the concentrated localized detection pattern.

Location Detection Comparison

A second stage applies the same detector intensity and investigates the relationship between model performance and detector location related to the location rating process. The location rating is based on the number of nodes the link is from adjacent cordon flow detection. For the SLC network, there are 8 links of Location 1, 14 links of Location 2, 8 links of Location 3 and 1 link of Location 4. Because there are 8 'Location 1' and 8 'Location 3' links, these two location ratings are comparison. Location 1's are along the network edge. Location 3's are more centralized providing insight into the network interior. Interior detection should provide more insight because it reduces the distance between unknown network flow elements and allows the estimates to be based on less remote data.

The results for the Location 1 and Location 3 detection pattern comparison shows that the Location 3 does provide an improved model performance over the Location 1. While localized and distributed network pattern incorporated similar flows to reduce the effects of traffic flow, however, the detection based on location rating does not allow the links to be selected by flow. Therefore there is a disparity in detection volumes.

Location 1 links have higher flows than Location 3 since Location 1's are on the outside of the network near the entering and exiting cordon loads. Location 3 is internal to the network and not all vehicles pass through the center of the network, therefore potentially reducing average internal flows. Since it is identified that higher flows produce higher model performance, the higher flows for Location 1 would support larger R2 than Location 3 if location were not a factor. While the flows for Location 1 are larger, the model performance is poorer. The sum of Location 3 link flow is an average 87% the Location 1 flow and yet the model performance of Location 3 is an average 25% higher than Location 1 model performance.

Detection Location Methodology

The individual detection of each link within the network provided insight as to how the flow and location effects modeling results. It was anticipated that utilizing flow inputs, with higher flow volumes, would provide an increase in model performance. However, preliminary results provided a wide scatter for a given V/C ratio. It was found that all links could not be plotted on the same graph due to the impacts of location as the link detector moved throughout the model. When the analysis was readjusted to only compare one location at a time and compare across V/C ratio, it was found that the correlation increased and the hypothesized results are supported. Increasing network detection is then discussed by increasing internal detection based on link flow level. Detection is first examined for increasing based on providing detection on the highest flow links and then systematically increasing based on the next highest flow. The reverse is also explored by increasing from lowest flow to highest flow. The results indicate that flow does play a critical role in modeling.

Multiple detector patterns are tested through two methods. The first method compares dispersed detectors throughout the network with concentrated detectors in one location. Six detectors for each pattern with the sum of detected links similar in total detected flow showed that a dispersed pattern provides a better model performance than the concentrated location pattern. The second method compares detection based on network Location rating. The results show that even with less flow on the links, a centralized location pattern provides superior model performance to a higher flow exterior location pattern. The analysis provides insight into how both flow and location affect model performance. The general trends provide a method for determining exactly how the model performance improves as a function of both flow and location.

A similar analysis includes the findings from the location factor indicating a divergence of linear slopes as the location rating

hypothesized theory. The results are two mathematical relationships that identify sensitivity of the model to detection coverage of the network and allow each link in the network to be assigned a priority based on the benefit to the modeling process. The research provides a method for evaluating impacts of network traffic detection locations on the ability to estimate network-wide road segment flows with 90% accuracy.

This work is most immediately useful in supporting adaptive control signal systems. With reductions in detection requirements, the cost of installing an adaptive control signal system may be dramatically reduced to support widespread implementation. The benefits of adaptive control are well documented, however they can only be realized when these systems are implemented and to date, cost constraints have limited their use. Applied research benefits are by reducing the overall costs for these systems and providing an attractive alternative to saturation detector coverage. Future work is now occurring at the University of Utah to connect the TMERT model and SCOOT for enhanced modeling research. The University of Utah Traffic Lab has already successfully connected SCOOT to the Federal Highways supported simulation model (CORSIM) providing the first SCOOT modeling available in the US. Other algorithms for adaptive signal control will be incorporated shortly to allow simulated performance comparisons among the various adaptive signal control systems.

REFERENCES

BELL, M. C. AND BRETHERTON, R.D. (1986) Ageing of fixed-time traffic signal plans. paper presented to the IEE International Conference on Road Traffic Control, London, England.

BELL, M.G.H. INAUDI, D. LANGE, J. AND MAHER, M. (1991) Techniques for the dynamic estimation of O-D matrices in traffic networks. *Proceedings of the DRIVE Conference: Advanced Telematics in Road Transport*, Brussels, Belgium, pp. 1040.

BEN-AKIVA, M. KAYSI, A. POLYDOROPOULOU, A. KOUTSOUPOULOS, H. AND WHITWORTH, P. (1996) Design of an integrated data collection program to support modeling of user response to ATIS services. Proceedings of the 4th Annual Meeting of ITS America, Dallas, Texas.

CHEN, P.S. AND MAHMASSANI, H.S. (1993) A dynamic interactive simulator for the study of commuter behavior under real-time traffic information supply strategies. Transportation Research Board, 1993 Annual Meeting, Washington D.C.

CREMER, M. AND KELLER, H. (1981) Dynamic identification of flows from traffic counts at complex intersections. Proceedings of the Eighth International Symposium on Transportation and Traffic Theory, pp. 121-142, Toronto, Canada.

CREMER, M. AND KELLER, H. (1987) A new class of dynamic methods for the identification of origin-destination flows. Transportation Research-B, vol. 21B, n. 2, pp. 117-132.

DAVIS, G.A. AND LAN, CHANG-JEN (1995) Estimating turning movement proportions from less than complete sets of traffic counts. Transportation Research Board, 1995 Annual Meeting, Washington D.C.

FILHO, M.B. LEITE DA SILVA, A.M. AND FALCAO, D.M. (1990) Bibliography on Power System State Estimation (1968-1989). IEEE Transactions On Power Systems, vol. 5, n. 3.

GARTNER, N.H. AND STAMATIADIS, C. (1997) Integration of dynamic traffic assignment with real-time traffic adaptive control. Transportation Research Board, 1997 Annual Meeting, Washington, D.C.

HEAD, K.L. (1995) An event based short-term traffic flow prediction model. Transportation Research Board, 1995 Annual Meeting, Washington D.C.

Highway Capacity Manual (HCM, 1998) Special Report 209, Transportation Research Board, Federal Highways Administration, Washington, D.C.

HOUNDSELL, N.B. AND MCDONALD, M. (1991) Implementation of Centralised Systems for the Control of Traffic in Real Time. Proceedings of the First International Conference on the Traffic Issue in Metropolitan Areas, p. 239, Porto, Portugal.

KOUTSOPOULOUS, H.N. LOTAN, T. AND YANG, Q. (1993) A driving simulator and its application for modeling route choice in the presence of information. Transportation Research Board, 1993 Annual Meeting, Washington D.C.

MARTIN, P.T. (1992) Urban Traffic Movement Prediction from Automatic Flow Detection. Nottingham University, Nottingham, England, Ph.D. Thesis.

MARTIN, P.T. AND BELL, M.C. (1993) Network Programming to Derive Turning Movements from Link Flows. Transportation Research Board Record 1365, pp. 147-154.

MARTIN, P.T. (1995) Turning Movement Estimation in Real Time (TMERT). California PATH Research Report, UCB-ITS-PRR-95-29, ISSN 1055-1425, University of California at Berkeley, Berkeley, California.

PERRIN, J. (1995) Turning Movement Flow Estimation in Real-Time, TMERT. Master's Thesis, California Polytechnic State University, San Luis Obispo, California.

PEETA, S. AND MAHMASSANI, H.S. (1995) Multiple user classes real-time traffic assignment for on-line operations: a rolling horizon solution framework. Transportation Research C., vol. 3, n. 2, pp. 83-98.

POLYDOROPOULOU, A. BEN-AKIVA, M.E. AND KAYSI, I. (1994) Influence of traffic information on drivers' route choice behavior. Transportation Research Record 1453, Transportation Research Board, National Research Council, Washington, D.C.

PLOSS, G. AND KELLER, H. (1986) Dynamic estimation of origin and destination flows from traffic counts in networks. Proceedings of the International Conference on Transportation System, Delhi, India, pp. 211-221.

ROBERTSON, D.I. (1969) TRANSYT: A Traffic Network Study Tool. Road Research Laboratory Report LR 253, Crowthorne, Berkshire.

Utah Transportation Laboratory (UTL, 1998) A Real-Time Flow Estimation Model for Advanced Urban Traffic Control — Final Project Report. University of Utah, Salt Lake City, Utah, UTRG-0998-12.

WOLSHON, P.B. AND TAYLOR, W.C. (1998) Analysis of Intersection Delay under Real-time Adaptive Signal Control. Transportation Research Board, 1998 Annual Meeting, Washington D.C.

YANG, H. KITAMURA, R. JOVANIS, P.P. VAUGHN, K.V. ABDEL-ATY, M. AND PRASUNA, R. (1993) Exploration of driver route choice with advanced traveler information using neural network concepts. Transportation Research Board, 1993 Annual Meeting, Washington D.C.

increases. This shows that the location rating importance increases as the flow profile increases. A single equation represents the estimated model performance as a function of location and flow. The exponential regression equations are comprised of the constant, C, and the power, D which are themselves functions of flow and location. This resultant equation provides an estimate of model performance impact as a function of flow and location rating. This general relationship provides a mechanism for identifying each potential detector location's value and thus is referred to as a Utility Function. Note that the model output is not in the higher R2 percentage because it is not only a single link. However, the ranking does allow the value of each location to be independently assessed and the general equation allows it to be applicable to multiple networks.

$$R^2_{est\ i} = Ce^{DL_i}$$

With, $C = 0.18 + 0.04q_i$
$D = 0.112*1.05(L_i - 1)$

where: R^2_{est} is model estimate for link i
q is flow in 1,000s on link i
L is Location Rating for link i

To test the capabilities of the Utility Function, it is compared to the individual link enumeration process. By calculating the Utility Function value for each link in the network and comparing the TMERT modeled and Utility Function rankings, the capability of the Utility Function can be ascertained. The results show the Utility Function provides 90% accuracy in ranking link importance when compared to the individual link evaluation.

Analysis Summary

The research goal and objectives set forth are fulfilled by the results of the analysis as the investigation evaluates:

1. How sensitive is the model to the intensity of detector coverage?
2. How sensitive is the model to detector location?
3. Will the model perform consistently for various network flow conditions: under-, near-, and -over-saturated conditions?

1. It was successfully hypothesized that as detection coverage increased, the model performance would increase with diminishing returns whereby additional detectors did not improve the modeling results. The resultant equations is:

$$R^2_{est} = 0.23Ln(D_{\%}) + 0.9844 \qquad R^2 = 91\%$$

Where:

$D_{\%}$ is the percentage links on the network with traffic detector

R^2_{est} is the estimated R^2 model performance value for all undetected turning movement and link flows

2. It was posed that the influence of a single detector on modeling performance is related to flow on the link and the link's relative position within the network. A rigorous enumeration process of individual link detection and multiple detection patterns validated the hypothesized theory. The result is a Utility Function that allows ranking of the links within a network for its relative value in locating a vehicle detection device. The results provide a method for evaluating impacts of network traffic detection locations on the ability to estimate network-wide traffic flow. The Utility Function is shown to be 90% accurate in identifying the relative value of each network link.

$$R^2_{est\ i} = Ce^{DL_i}$$

With, $C = 0.18 + 0.04q_i$
$D = 0.112*1.05(L_i - 1)$

Where:

R^2_{est} is model estimate for link i
q is flow in 1,000s on link i
L is Location Rating for link i

3. Network flow level based on a measure of congestion included network V/C from 0.5 to 1.1 in 0.1 intervals. Network flow on model performance followed the same general relationships. Increasing congestion provided increased TMERT results for lower detection levels. As detection increases, the difference in performance between different congestion levels decreases. Congestion influences the TMERT modeling results because, as has been identified, flow is one of the factors in model performance.

The Utility Function ranking method assigns detector location within a network and provides a mechanism for supporting flow estimation models that eliminates the need for saturation detection. TMERT performance as a function of detection coverage allows engineers to decide between the level of accuracy and the cost for increased detection. Finally, the modeling shows that TMERT is reliable across the range of network flow conditions from under-saturated through over-saturated.

Conclusion

It was successfully hypothesized that as detection coverage increased, the model performance would increase with diminishing returns whereby additional detectors did not improve the modeling results. The results support a 15% increase in modeling correlation per 10% increase in detection for the initial 30% of detection. After the 30% detection threshold, the performance improvement with increased detection shows a reduced benefit to 2% per 10% increase in detection.

The influence of a single detector on modeling performance is related to flow on the link and the link's relative position within the network. A rigorous modeling process of individual link detection and multiple detection patterns validated the